# Specify Imprint Position / Instructions

## 7197-25 Blackwater Outdoor Bluetooth Speake

**Use Template below for sizing and placement of artwork.**

**USE (Speaker Pattern Layer) to toggle the pattern on for the final Imprint Appearance after the Art is set on the Artwork layer.**

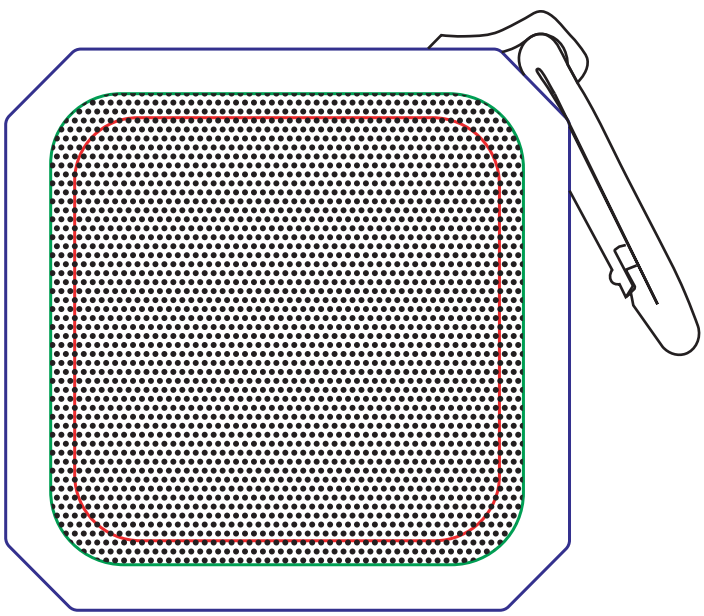

- Text Limit = no text outside this point (2.22” W X 2.21” H)
- Bleed Edge = Image area only no imprint will exceed this edge (2.47” W x 2.46” H)
- Item Edge = Template at actual size (2.95” W x 2.93” H)

# Specify Imprint Position / Instructions

## 7197-25 Blackwater Outdoor Bluetooth Speake

**Use Template below for sizing and placement of artwork.**

**USE (Speaker Pattern Layer) to toggle the pattern on for the final Imprint Appearance after the Art is set on the Artwork layer.**

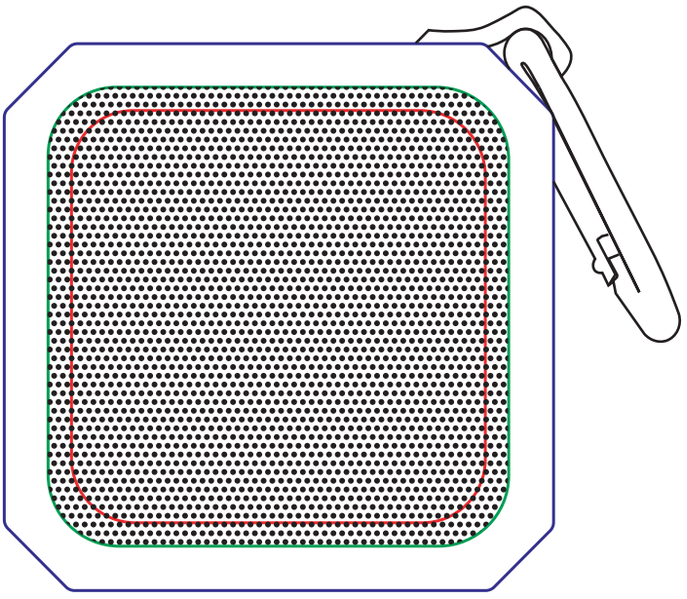

- Text Limit = no text outside this point (2.22” W X 2.21” H)
- Bleed Edge = Image area only no imprint will exceed this edge (2.47” W x 2.46” H)
- Item Edge = Template at actual size (2.95” W x 2.93” H)

# Blackwater IPX6 Outdoor Waterproof Bluetooth Speaker

**Item Number: 7197-25**

**Decoration Method**
Digital Print Inkjet

***Decoration Location**
Buttons Top,Caribiner Top/Right - - Centered on Speaker Grill (Per Template)

**Imprint Area**
Height: 2.39 Inches
Width: 2.4 Inches



Actual Size

Disclaimer: Recommeded vector artwork or high-resolution images with a minimum of 300 dpi in the following formats: TIF, JPG, EPS, AI. For vector files containing text, please ensure that fonts are converted to outlines. Please note that electronic proofs might differ due to individual computer settings, potentially affecting color depiction and image quality. ***Access layers palette for additional locations.**

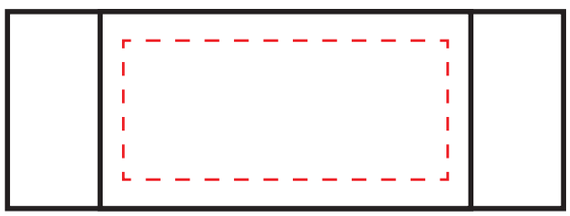

Actual Size

7197-25 Blackwater Outdoor Bluetooth Spea

BW Front